Sliding salt and pepper box plan

Each kitchen in the world as a basic kitchen utensil owns the salt and pepper shaker, and they are being used on a daily basis. This wooden salt and pepper box plan is offering you one kitchen tool that can replace those usual salt and pepper shakers. You will be amazed how easy is to make this wooden spice box, and how easy is to use it. Its wide openings allow you to grab the salt and pepper with the spoon, or hand, by simply sliding the lids from the boxes. Of course, you can make these boxes for different kinds of spices, or by changing its dimensions, you can easily adjust this sliding lid box for a different purpose.

It will last a lifetime, but be careful to wash it with warm water by hands.

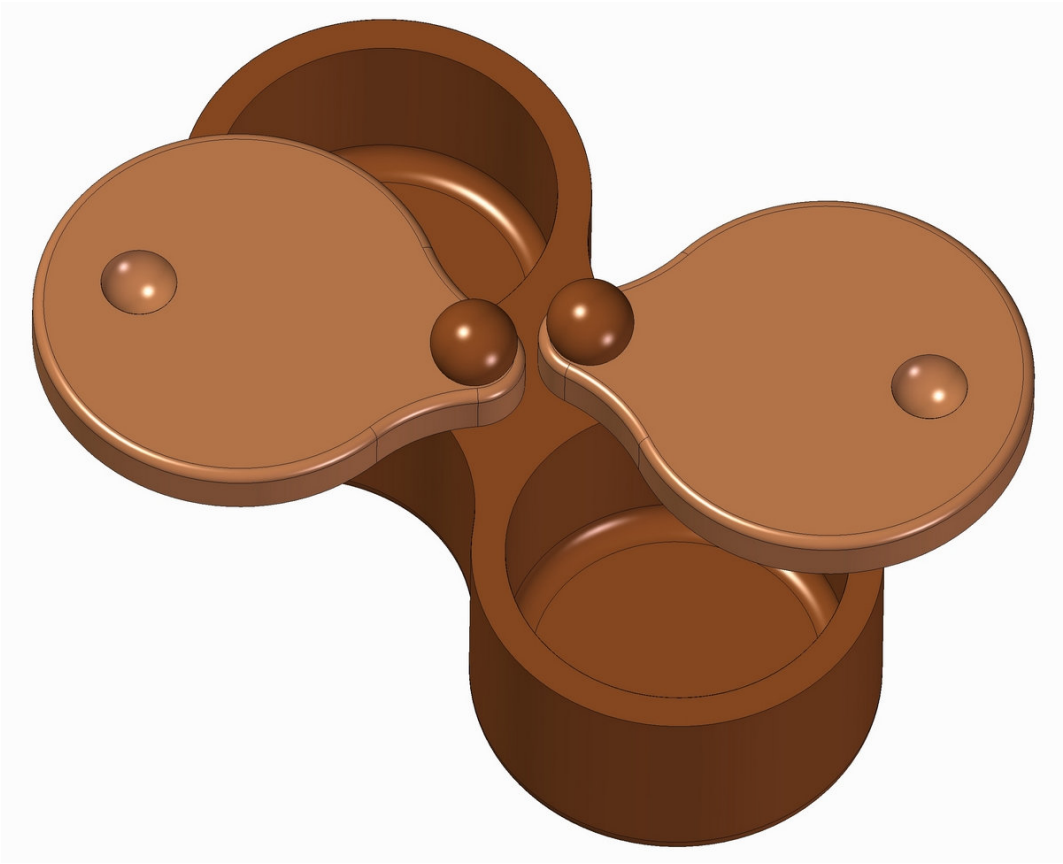

The measurements are given in millimeters, while the measurements given in inches are in brackets (1 inch = 25, 4 mm).

Sliding salt and pepper box plan – Parts list

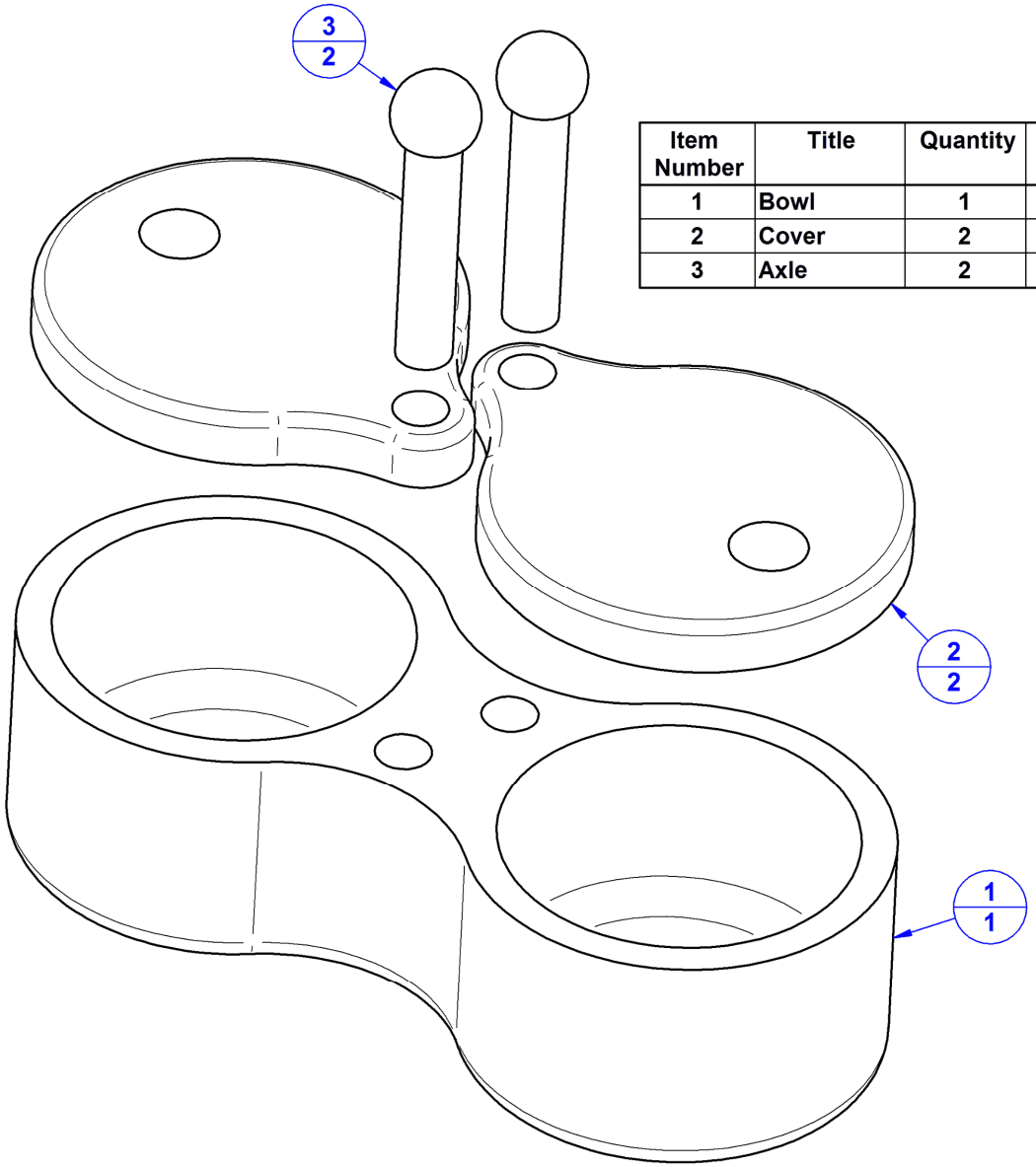

Item Number	Title	Quantity	Material
1	Bowl	1	Wood
2	Cover	2	Wood
3	Axle	2	Wood

Sliding salt and pepper box plan – Assembly 2D drawing

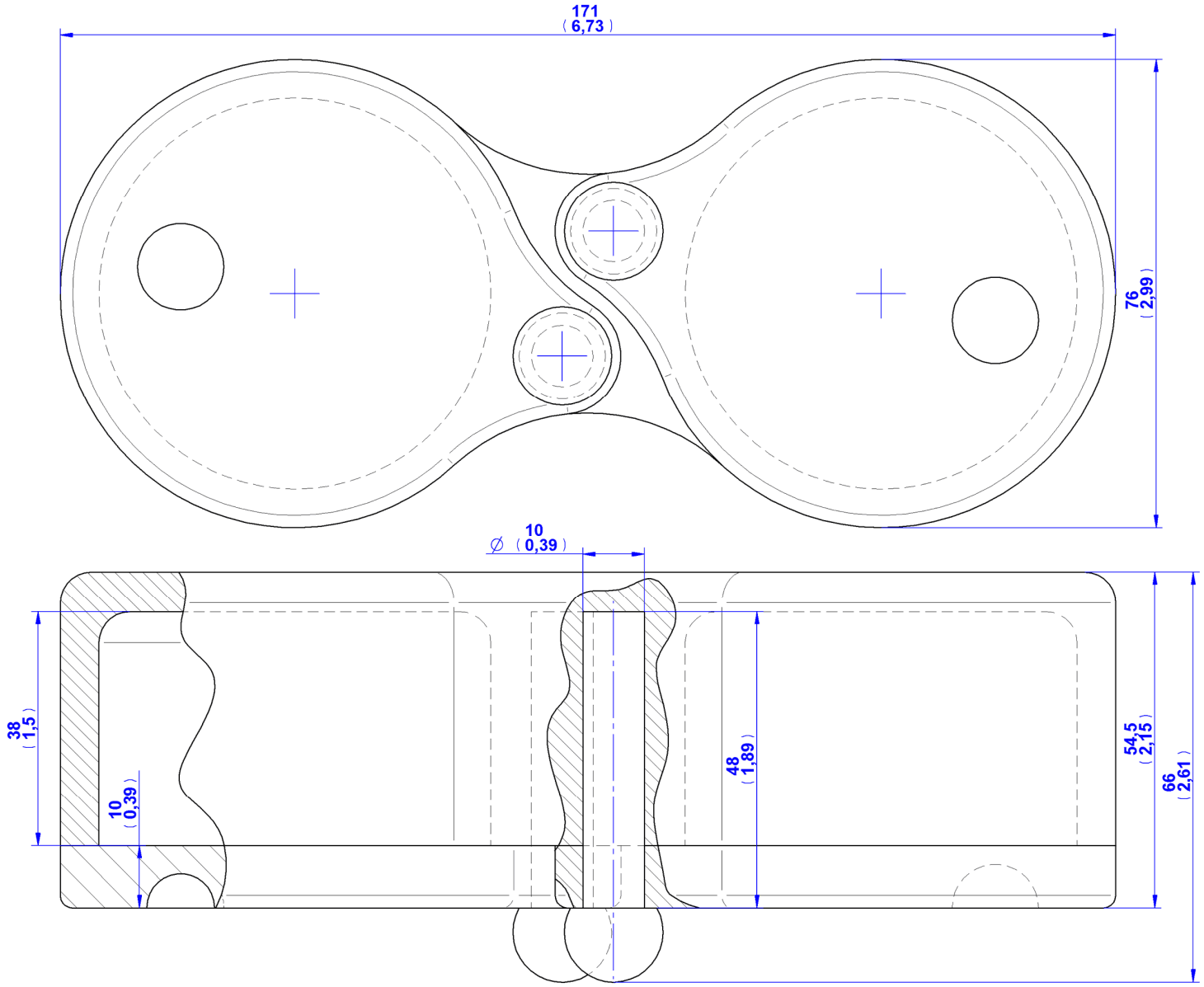

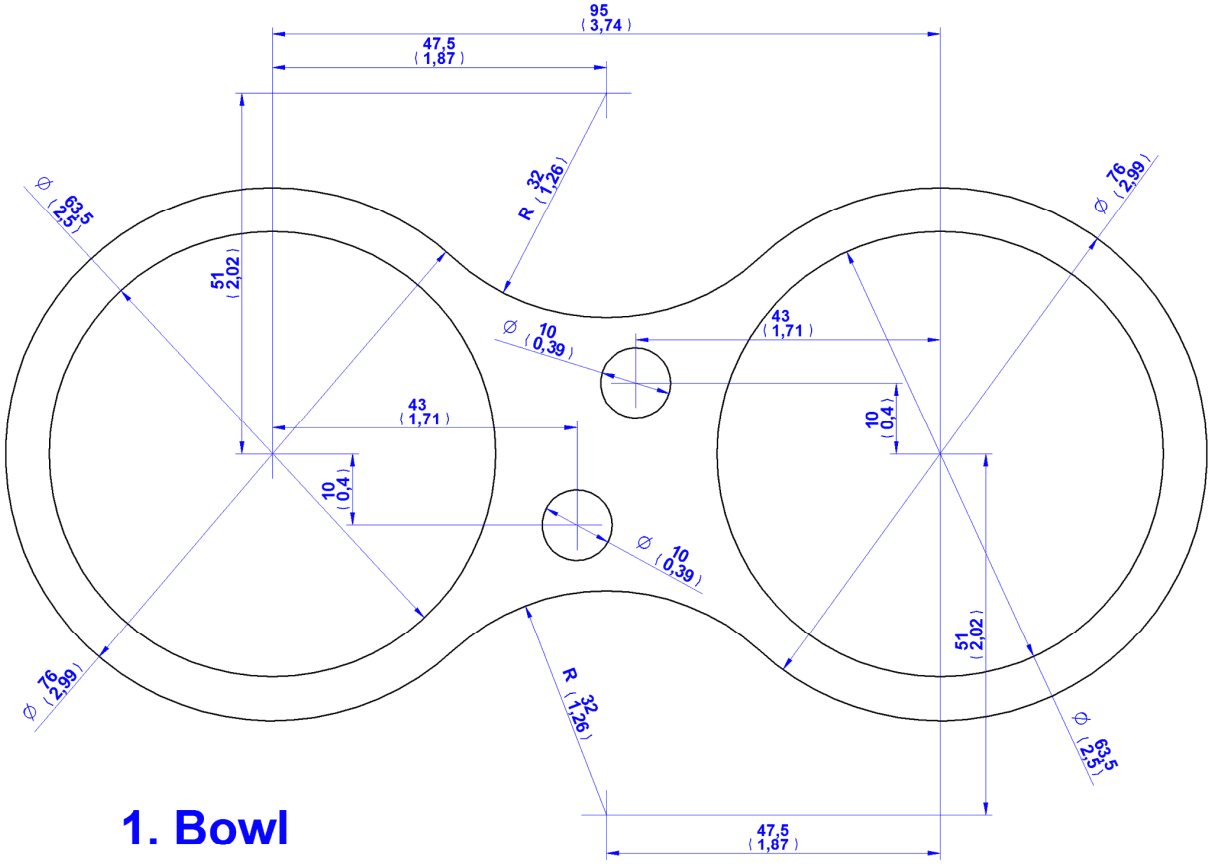
95
(3,74)
47,5
(1,87)
R 32
(1,26)
Ø 63,5
(2,5)
51
(2,02)
Ø 10
(0,39)
43
(1,71)
10
(0,4)
Ø 76
(2,99)
Ø 10
(0,39)
R 32
(1,26)
Ø 76
(2,99)
51
(2,02)
Ø 63,5
(2,5)
47,5
(1,87)

1. Bowl

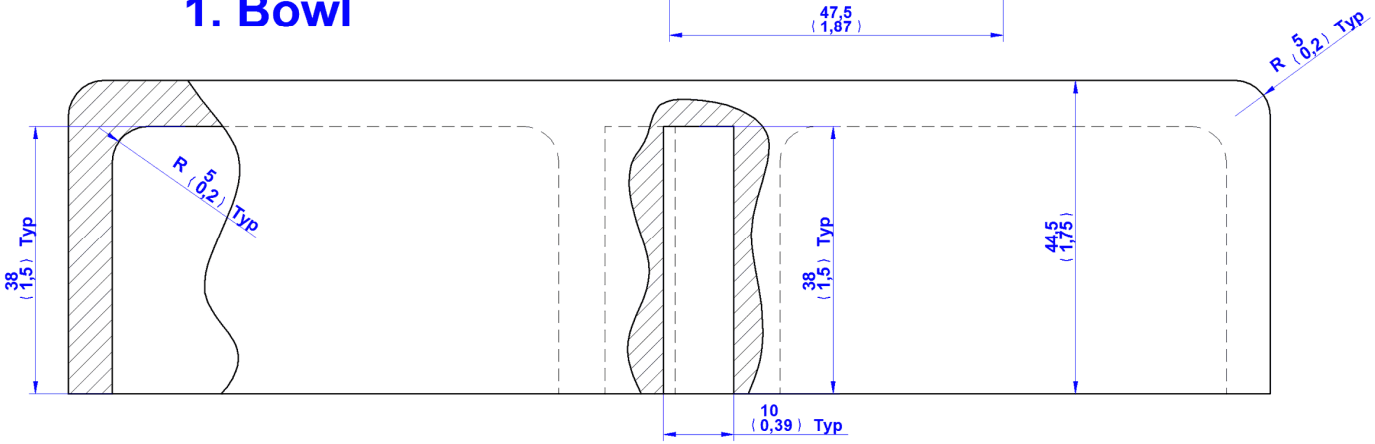
R 5
(0,2) Typ
38
(1,5) Typ
R 5
(0,2) Typ
38
(1,5) Typ
44,5
(1,75)
10
(0,39) Typ

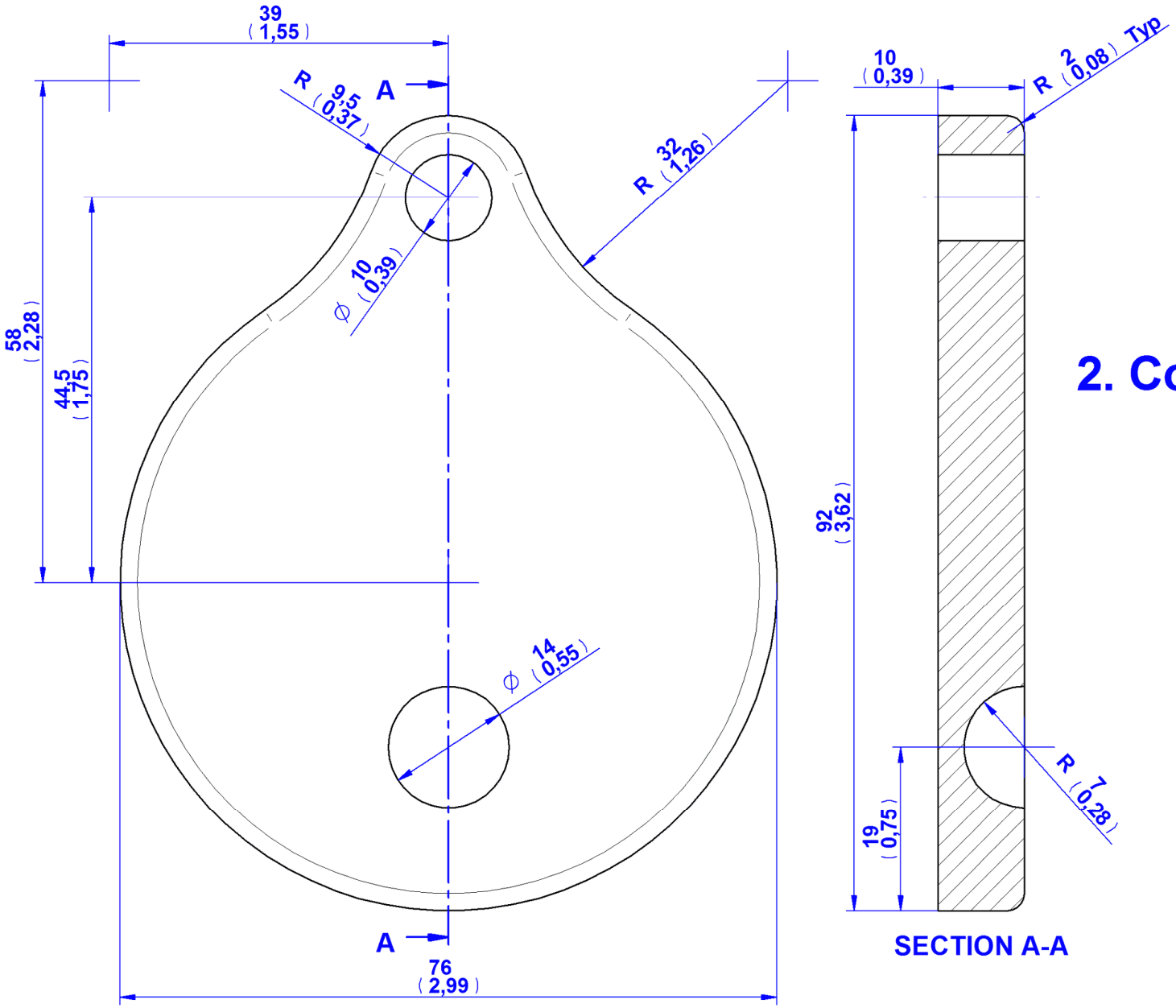
39
(1,55)
R 9,5
(0,37)
A
R 32
(1,26)
10
(0,39)
Ø
58
(2,28)
44,5
(1,75)
Ø 14
(0,55)
A
76
(2,99)
10
(0,39)
R 2
(0,08) Typ
92
(3,62)
R 7
(0,28)
19
(0,75)
SECTION A-A

2. Cover

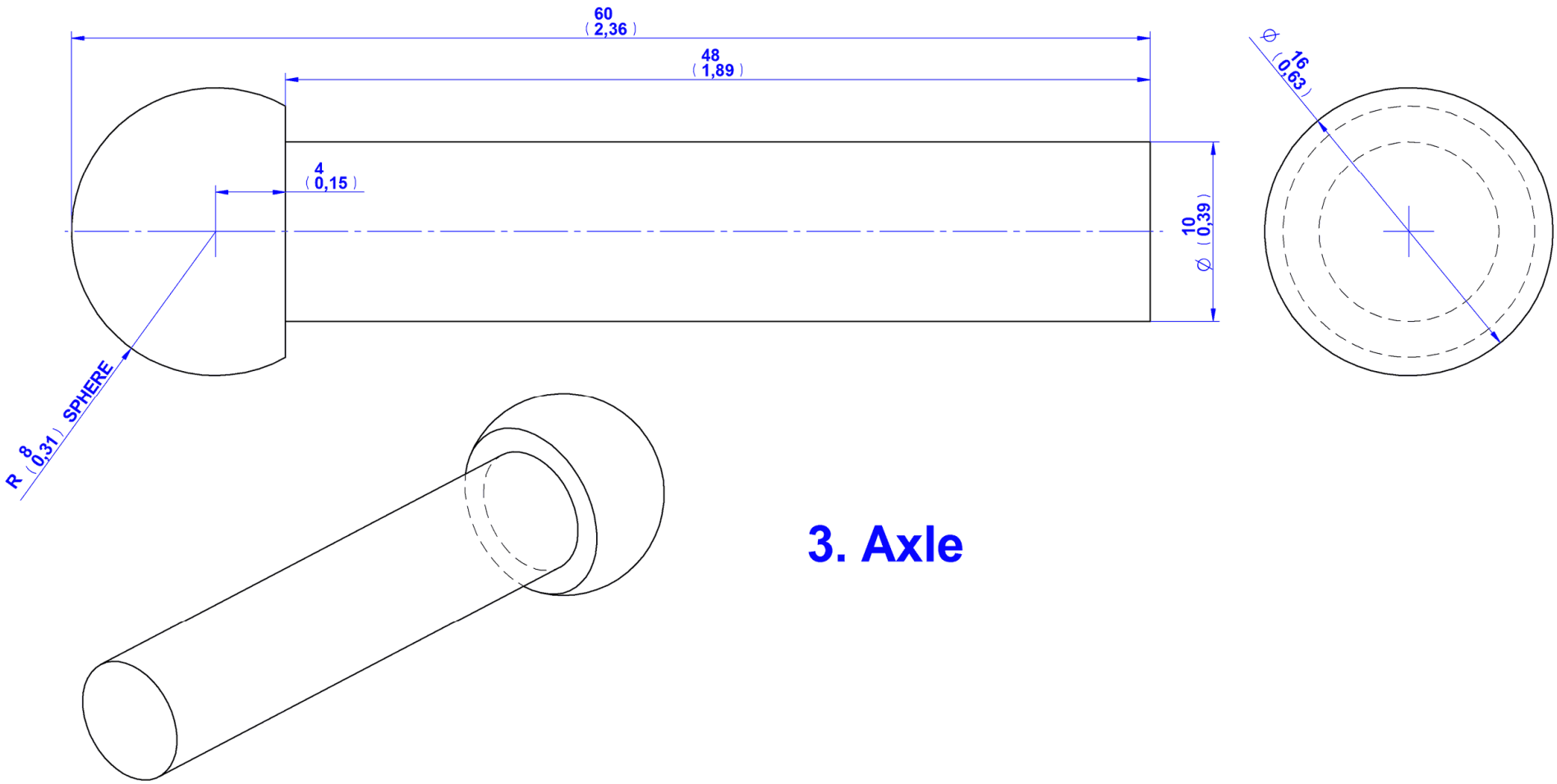

3. Axle

Assemblage instructions
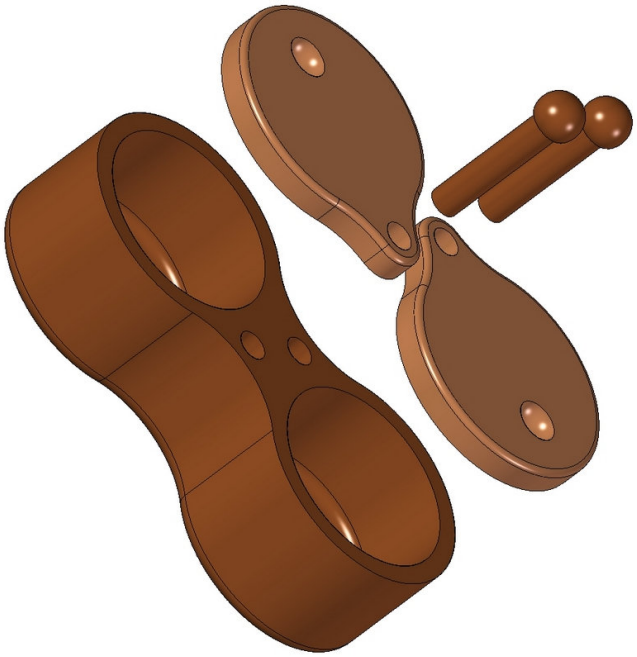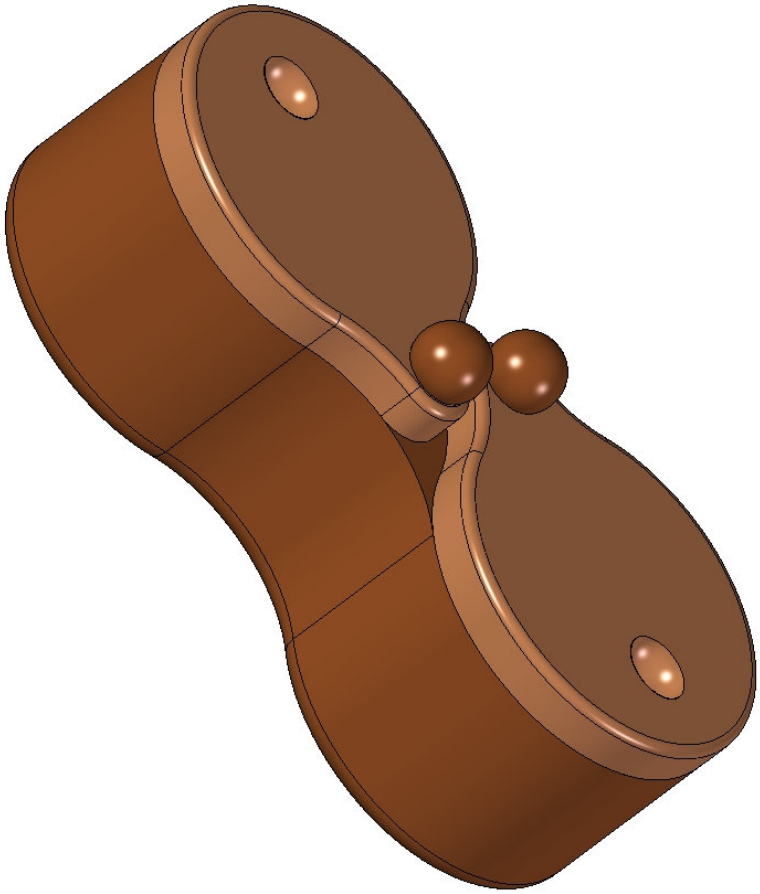
Attach the Covers (part 2) and Axles (part 3) to the Bowl (part 1) using glue.